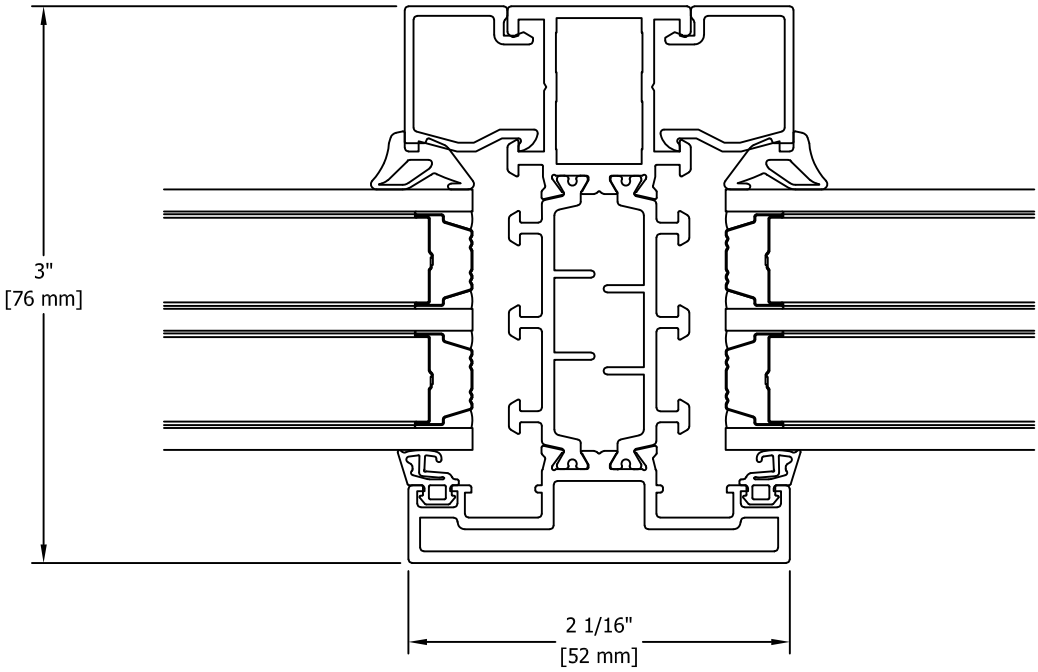VISTALUXE AL LINE
DIRECT SET
3" JAMB
1-3/8" TRIPLE PANE
TRUE DIVIDED LITES