KOLBE WINDOWS & DOORS

VISTALUXE AL LINE
DIRECT SET / TILT TURN
5 1/8" COUPLER
1-3/8" TRIPLE PANE
MULLING DETAIL

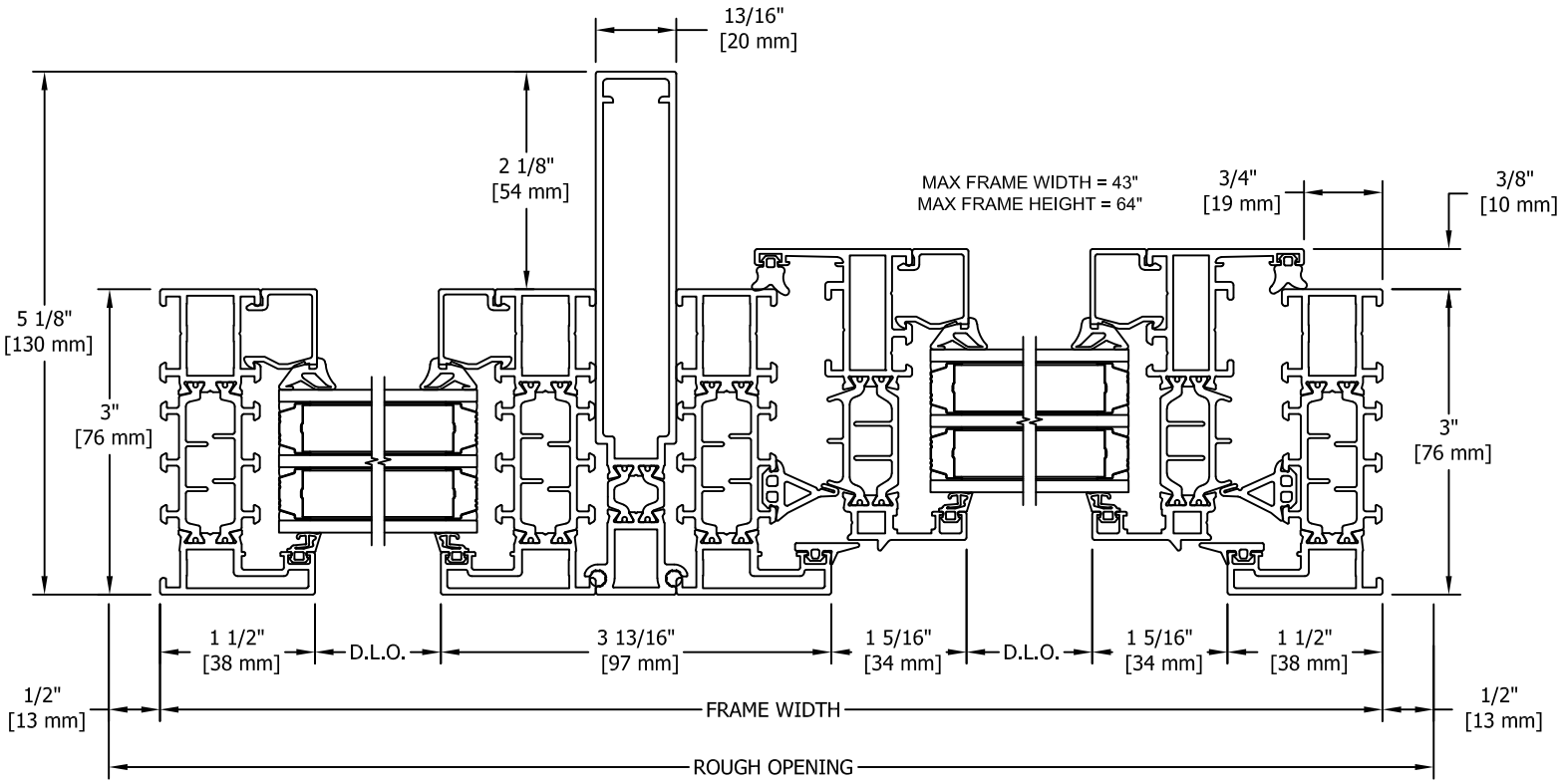

MAX FRAME WIDTH = 50"
MAX FRAME HEIGHT = 76"

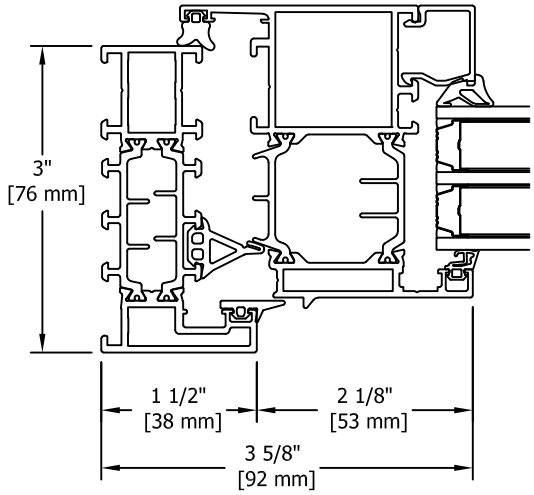
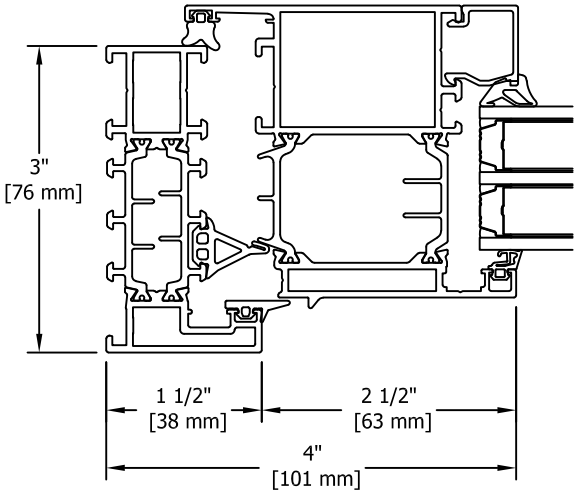
MAX FRAME WIDTH = 50"
MAX FRAME HEIGHT = 84"