KOLBE WINDOWS & DOORS
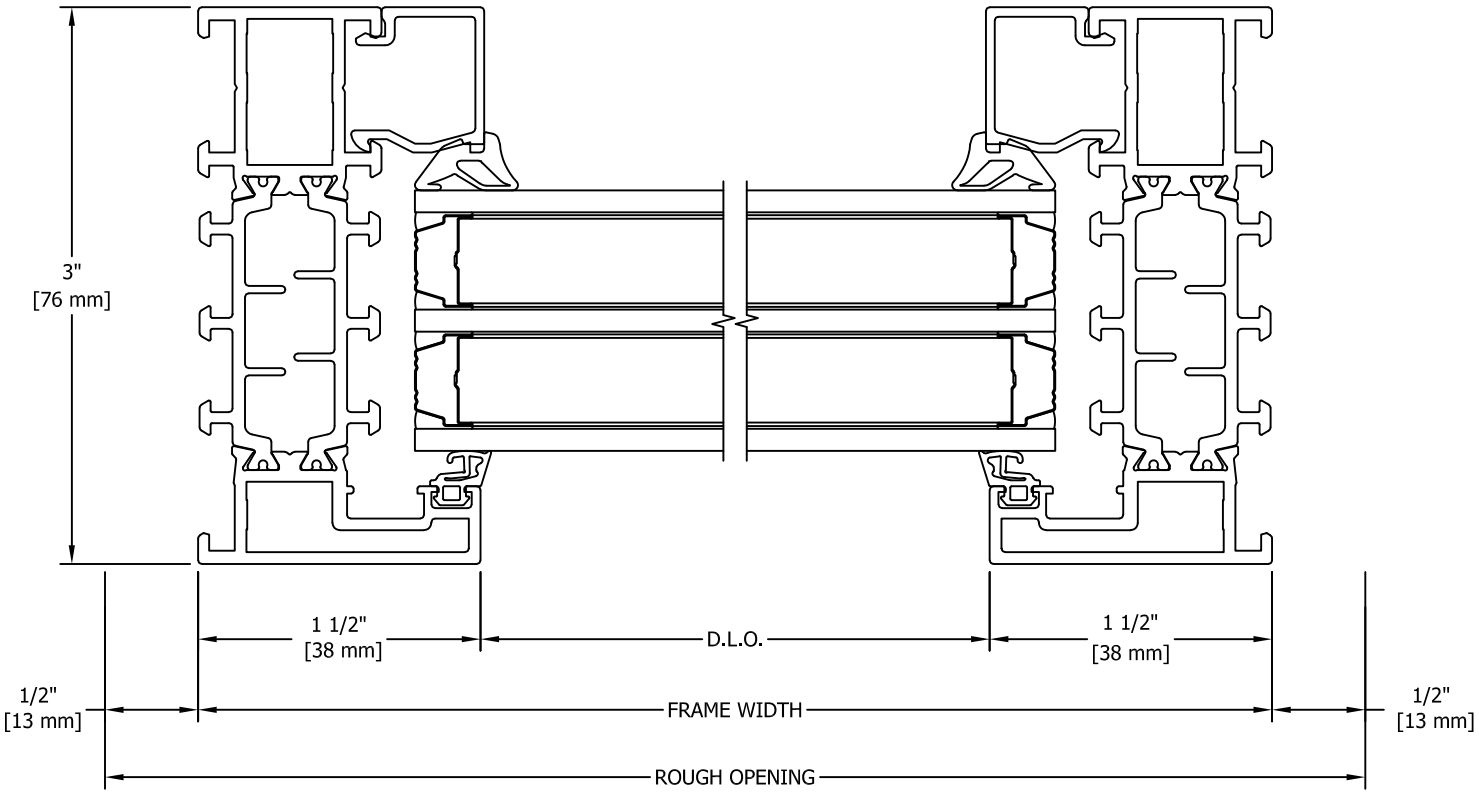
VISTALUXE AL LINE
DIRECT SET
3" JAMB
1-3/8" TRIPLE PANE
HORIZONTAL CROSS SECTION