KOLBE WINDOWS & DOORS

VISTALUXE AL LINE
2 WIDE INSWING DOOR
2 11/16" JAMB
1-3/8" TRIPLE PANE
HORIZONTAL CROSS SECTION

05/31/19

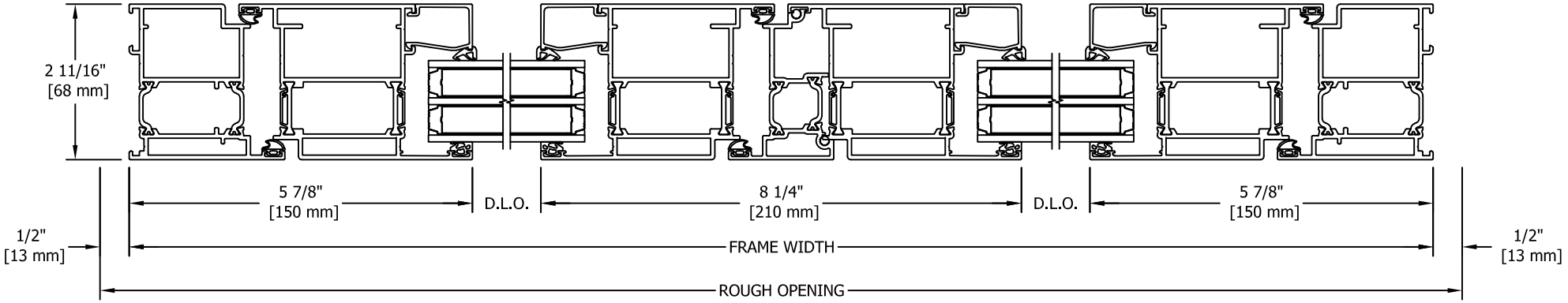


65B215

ADHL.1