KOLBE WINDOWS & DOORS
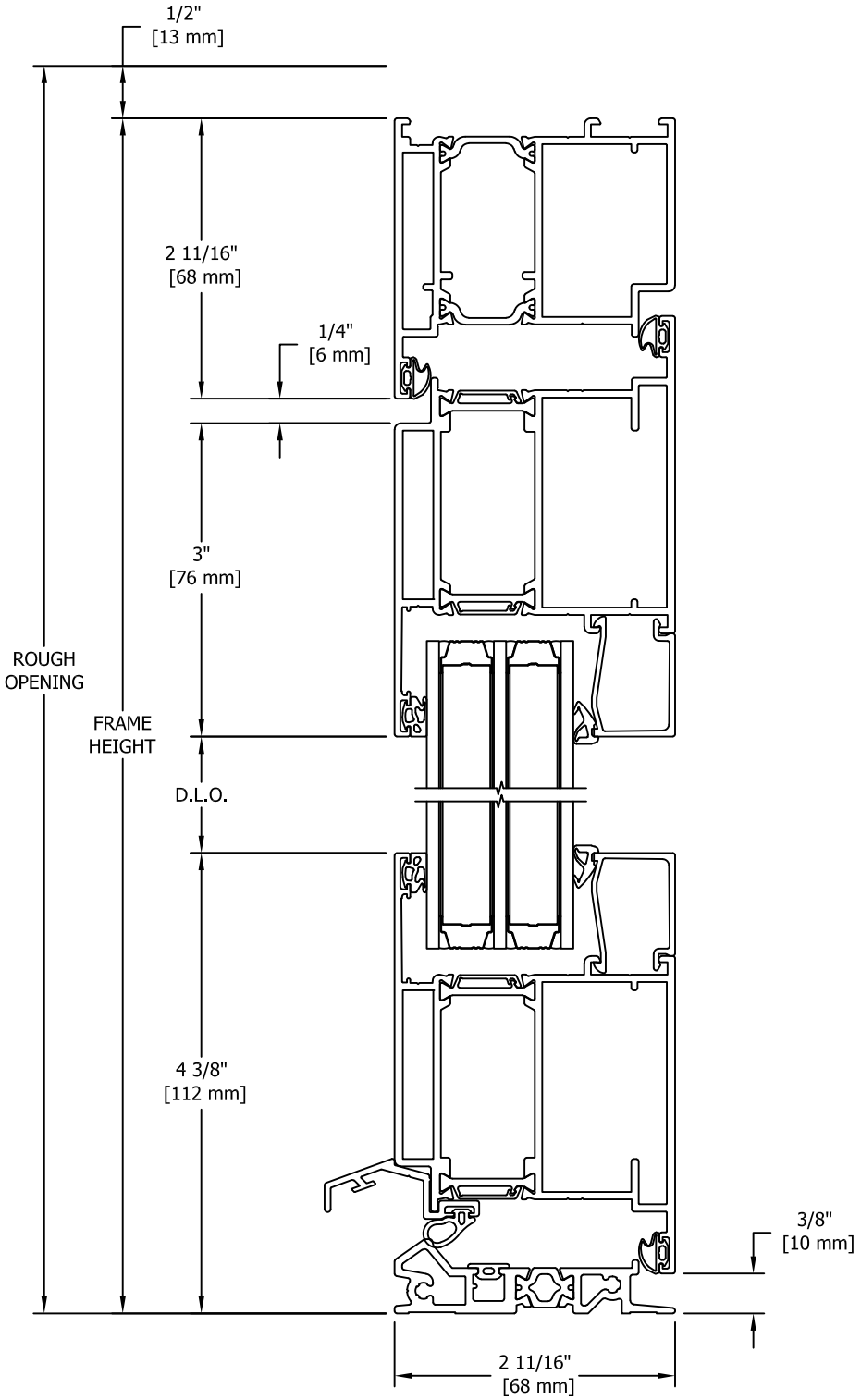
VISTALUXE AL LINE
INSWING DOOR
2 11/16" JAMB
1-3/8" TRIPLE PANE
VERTICAL CROSS SECTION