KOLBE WINDOWS & DOORS

VISTALUXE AL LINE
PUSH OUT CASEMENT
3" JAMB
1-3/8" TRIPLE PANE
HORIZONTAL CROSS SECTION

06/18/19

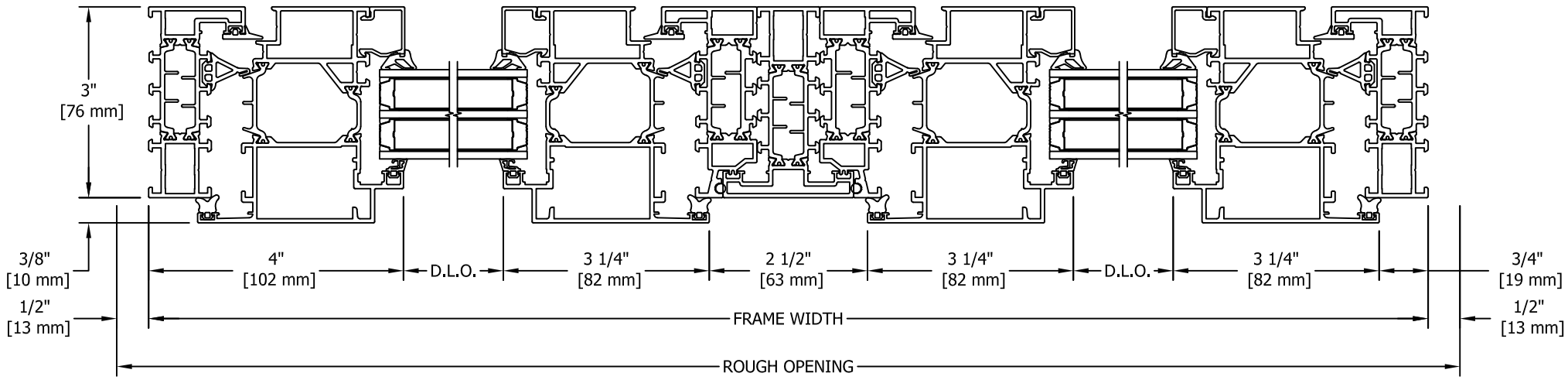

2A2D78

ADHL.1