KOLBE WINDOWS & DOORS

VISTALUXE AL LINE
DIRECT SET SIDELITE TRANSOM
2 11/16" JAMB
1-3/8" TRIPLE PANE
HORIZONTAL CROSS SECTION

05/24/19

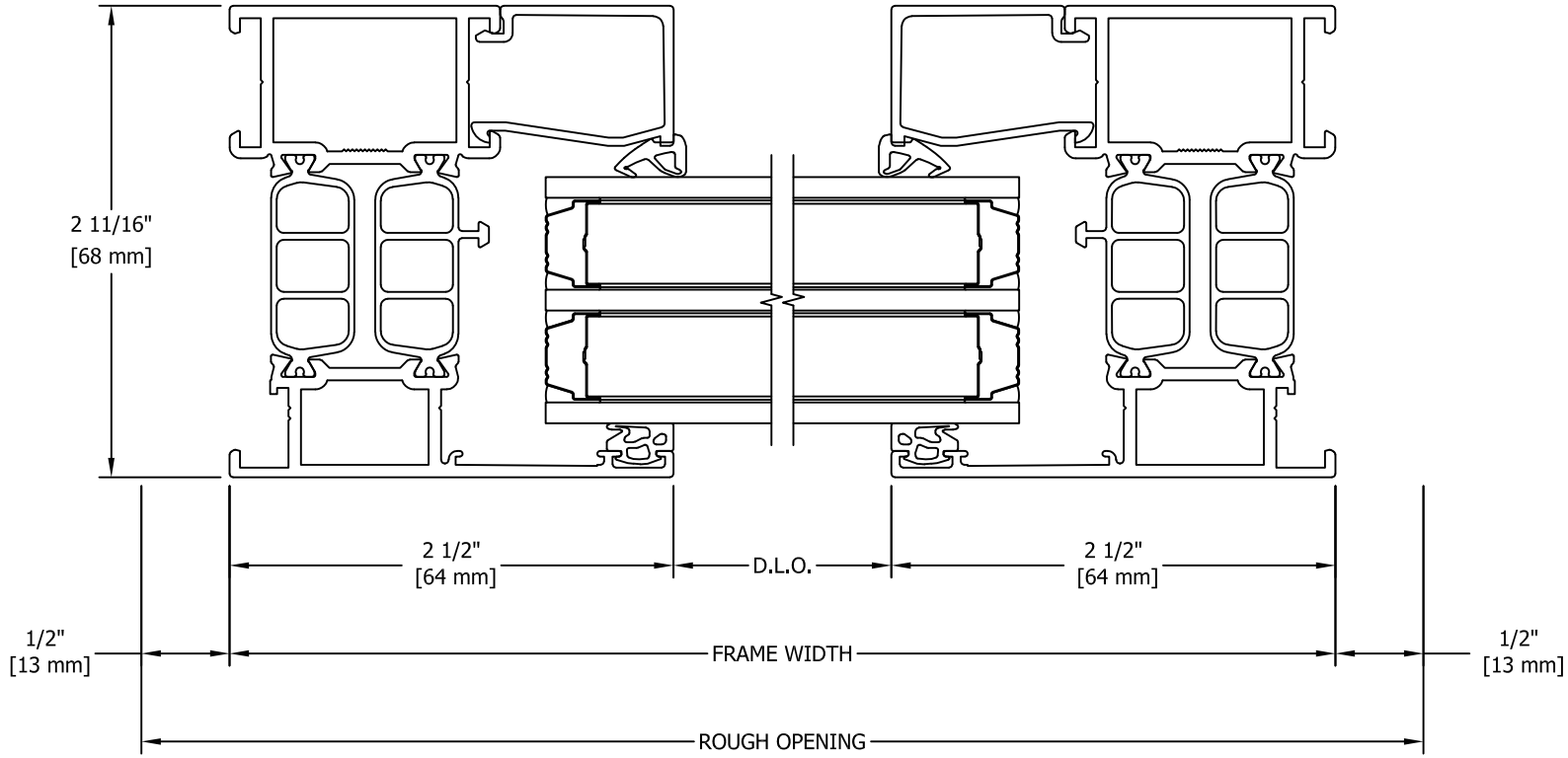

3C3508

ADHL.1