KOLBE WINDOWS & DOORS

VISTALUXE AL LINE
TILT TURN
3" JAMB
1-3/8" TRIPLE PANE
HORIZONTAL CROSS SECTION

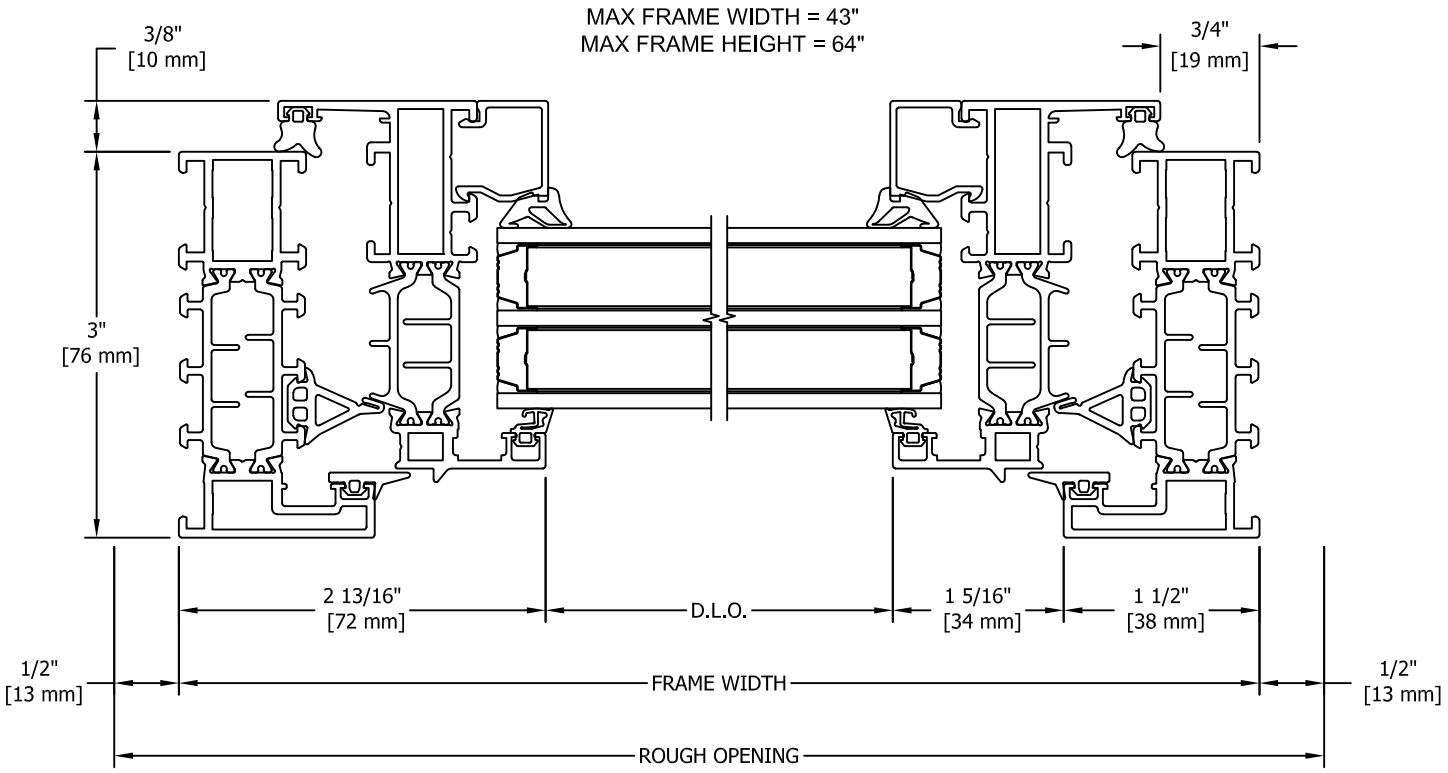

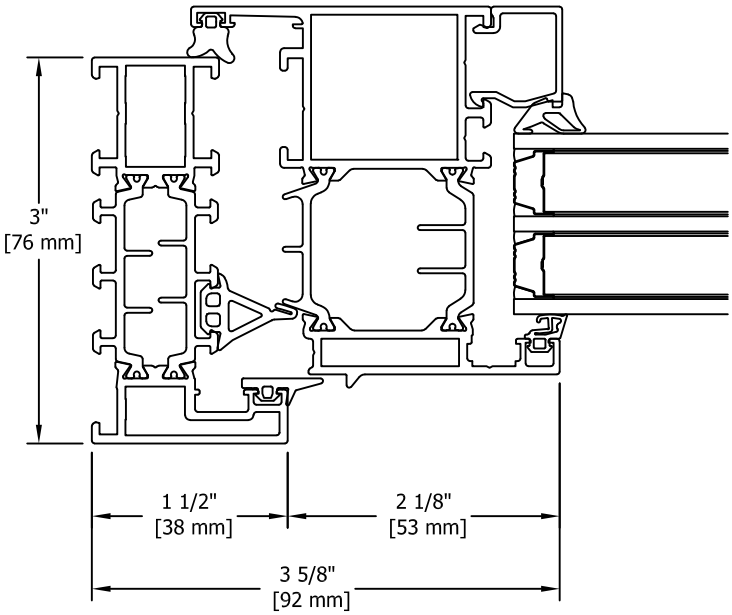

MAX FRAME WIDTH = 50"
MAX FRAME HEIGHT = 76"

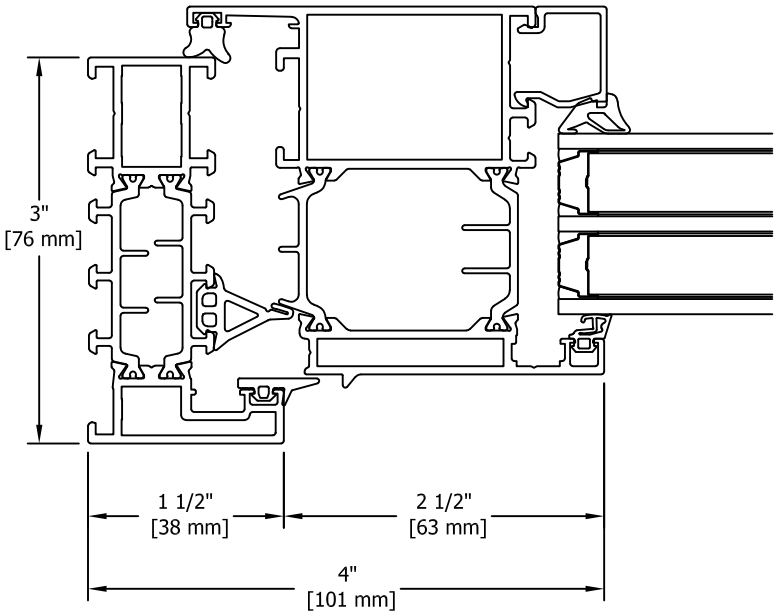

MAX FRAME WIDTH = 50"
MAX FRAME HEIGHT = 84"